ecube

The ELECTRIFYING Mobile Tire Service REVOLUTION

ALL-iN-1
48V TIRE SERVICE TECHNOLOGY

THE MOST TECHNOLOGICALLY ADVANCED MOBILE TIRE SERVICE UNIT IN THE MARKET!

ECUBE-EQUIPMENT.COM

cube The ELECTRIFYING Mobile Tire Service REVOLUTION

ALL-iN-1 48V TIRE SERVICE TECHNOLOGY

SERVICING FUTURE MOBILITY. MOBILE!

- **Requires just 1.1m²/12ft² of floor space**
- Compact dimensions allow flexible installation
- 48V premium battery bank - lithium or AGM
- No disturbing noise or fumes
- Works on a wide range of tire sizes
- Guarantees workshop quality in your customer's driveway
- Easy to (de)install
- Easy to operate
- Cold climate? Doors closed – full functionality
- NIOSH recommended working height
- Massive cost savings on idling engine
- Remote monitoring, software updates and trouble shooting
- Lightweight
- Service friendly modular design
- The heart of your mobile service platform
- Bring the WOW factor to your customer
- Specifically designed for mobile service market
- Designed, engineered & manufactured in the EU

CONTACT US FOR DETAILED INFORMATION AND PRICING

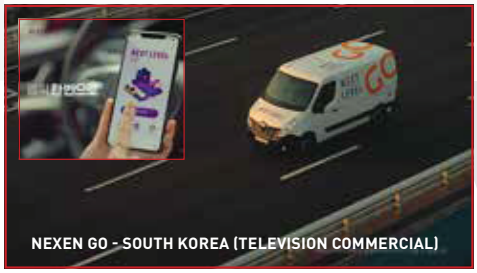
NEXEN GO - SOUTH KOREA (TELEVISION COMMERCIAL)

EMISSION FREE EV EMERGENCY CHARGING

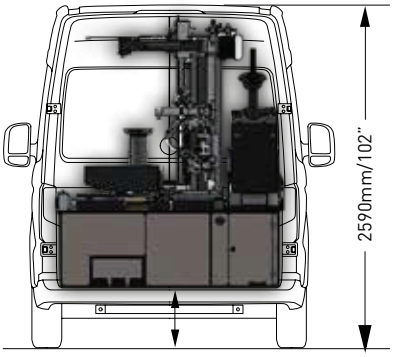

Designed, engineered & manufactured in the EU

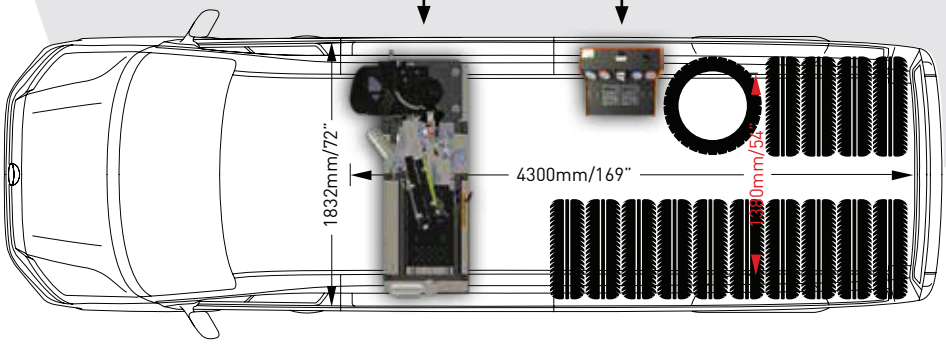

*Drawings show a possible vehicle configuration of VW Crafter L4H2 2018

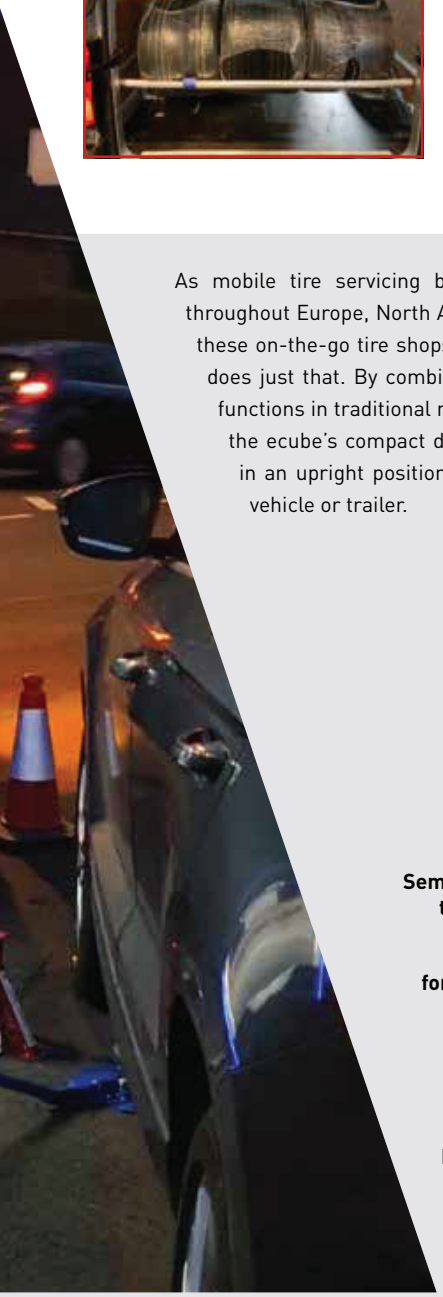

As mobile tire servicing becomes more and more popular throughout Europe, North America and Asia, innovation in how these on-the-go tire shops operate must keep up. Our ecube does just that. By combining all of the necessary tools and functions in traditional mobile tire service vehicles into one, the ecube's compact design allows the mechanic to work in an upright position while inside any light commercial vehicle or trailer.

Not only does this make the mechanic's job easier, but also creates space for more tires and service equipment to be stored in the vehicle ensuring more profitable 'stops'. Additionally, the ecube does not require a generator onboard, which means no fumes or noise pollution.

Even with its compact and lightweight design the ecube makes no compromises on functionality and robustness. It is still capable of changing tires from 10 inches to 24 inches with 40 inches as maximum wheel diameter.

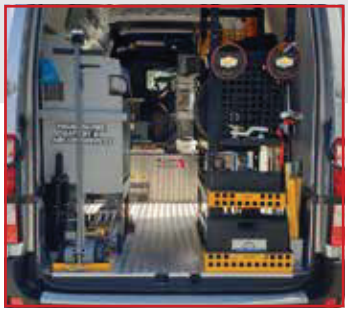
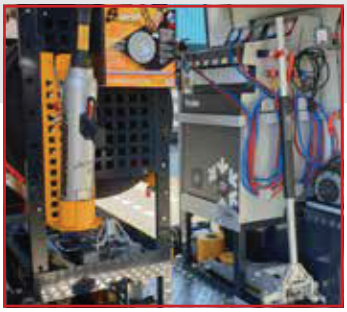

ecube

24" 23" 22" 21" 20" 19" 18" 17" 16" 15" 14" 13" 12" 11" 10"

SPECIFICATIONS E-CUBE ALL-IN ONE TIRE CHANGER

	BASIC MODEL			PREMIUM MODEL		
TIRE CHANGER	48 VOLT SEMI AUTOMATIC 10"-24" (max wheel D. 40")			48 VOLT SEMI AUTOMATIC 10"-24" (max wheel D.40")		
WHEEL BALANCER	**HAND-SPIN** 2D 10" - 26" 3 cones 42 - 111,5 mm			**MOTORIZED** (Made in Italy) 2D 10" - 26". Digital balancer - 98 RPM - 3 sensor - 3 cones 42 - 111,5 mm		
BATTERY PACK	AGM batteries	48V	100Ah	LITHIUM LiFeP04	48V	60Ah
INVERTER	NO			48V-230V/110V pure sine	48V-230V/110V pure sine	
TOUCHSCREEN	NO			HDMI LCD 10.1 inch IPS 1280x800 capacitive Touchscreen. Camera live feed - Battery and inverter status - battery consumption & history - Service page with manuals, videos, torubleshooting - Router login - Optional page for EV emergency charge system		
INFLATION	ANALOGIC			DIGITAL		
DUAL COMPUTER SYSTEM	YES			YES		
MOTOR CONTROL	"Micro computer - Atmel AT mega 32U4 16Mhz Crystal oscillator 8-bit resolution"			"Micro computer - Atmel AT mega 32U4 16Mhz Crystal oscillator 8-bit resolution"		
CENTRAL CONTROL	NO			"Micro computer -core 64-bit processor clocked at 1.4 GHz, 2GB LPDDR" SRAM"		
CAMERA	NO			Mini CCD/CMOS HD digital camera		
ROUTER	NO			"Rugged and durable professional 4G/LTE Dual SIM cellular route with advanced WiFi, Ethernet and industrial grade networking functionality support. "		
POWER SUPPLY CHARGING SMART	AC - 48V - 8A / DC - 48V - 10A			AC - 48V - 8A / DC - 48V - 10A		
POWER SUPPLY CHARGING COMBINED	AC/DC - 48V - 18A			AC/DC - 48V - 18A		
POWER PACK REMOVABLE	YES			YES		
POWER PACK MULTIUSE	NO			Usable as portable UNIT: 1200W AC		
POWER PACK PROTECTION	For low discharge and overcharge			For low discharge and overcharge		
TIRE CHANGER	**MIN. "**	**MAX. "**		**MIN. MM**	**MAX. MM**	
Rim diameter	10"	24"		254	610	
Total tire diameter with rim 24"	-	40"		-	1016	
Total tire diameter with rim 23"	-	39"		-	990	
Total tire diameter with rim 22"	-	38"		-	965	
Total tire diameter with rim 21"	-	37"		-	940	
Total tire diameter with rim 20"	-	36"		-	915	
Total tire diameter with rim 19"	-	35"		-	990	
Total tire diameter with rim 18"	-	34"		-	864	
Total tire diameter with rim 17"	-	33"		-	838	
Total tire diameter with rim 16"	-	32"		-	813	
Total tire diameter with rim 15"	-	31"		-	788	
Total tire diameter with rim 14"	-	30"		-	762	
Total tire diameter with rim 13"	-	29"		-	737	
Total tire diameter with rim 12"	-	28"		-	712	
Total tire diameter with rim 11"	-	27"		-	686	
Total tire diameter with rim 10"	-	26"		-	661	
Wheel width	2"	19"		50	485	
Bead press system	Upper and lower bead press by roller					
Bead press roller force	-	2600Kg		26000Nm	5734 Lbs	
Clamping system	Central clamping with pneumatic spindle and Haweka quicknut					
Rotating spindle speed	1 RPM	15 RPM		variable	-	
Rotating spindle force	800Nm					
Inverter motors	Yes					
Gearbox	Made in Italy					
COMPRESSOR	**48V - 2 CILINDER 1,5 HP - BELT DRIVEN**					
Air tank capacity	15 Gallon / 60 Liter			15 Gallon / 60 Liter		
Air pressure	130 Psi / 9 Bar			130 Psi / 9 Bar		
Air flow pump out	10 Cfm / 284 L/pm			10 Cfm / 284 L/pm		
Noise volume	69 Db. (A)			69 Db. (A)		
ECUBE KEY DATA						
Weight	1014 Lbs	460Kg		992 Lbs	450Kg	
Dimensions L x W x H	1500mm	560 + 180mm		1800mm	560 + 180mm	
	59"	22" + 7"		71"	22" + 7"	
ecube components volume	53ft³	1,5m³		53ft³	1,5m³	

ECUBE-EQUIPMENT.COM

Authorised dealer:

H&G HOIST & GARAGE

0800 436 436
hoistandgarage.co.nz