ELECTROMECHANICAL 2-POST LIFT

SMART LIFT

THE SMART ORIGINAL

THE ORIGINAL NUSSBAUM LIFT

- Flexible in height: Ideal for low ceiling workshops
- Asymmetric lifting arms and carriage for optimal door clearance
- Small footprint - Saves space

3000 KG | 3500 KG | 4000 KG

Made in Germany

ELECTROMECHANICAL 2-POST LIFT

SMART LIFT

Sturdy, reliable and ready

The SMART LIFT is THE classic NUSSBAUM lift: it is the result of 40 years experience in the manufacturing of lifts. Featuring a tried and tested design. More than 100,000 units are installed worldwide.

SAFE

- ✓ Automatic locking of the arms
- ✓ Safety nut under the carrying nut
- ✓ Optical control of the wear out of the carrying nut

LONG LASTING

- ✓ Low wear Nylatron-nut guarantees a quiet operation
- ✓ Resistant and almost wear-free Poly-V belt

Minimal height of only 2890 mm

The data and electric cable that connect the 2 columns can be installed above the columns or in the floor

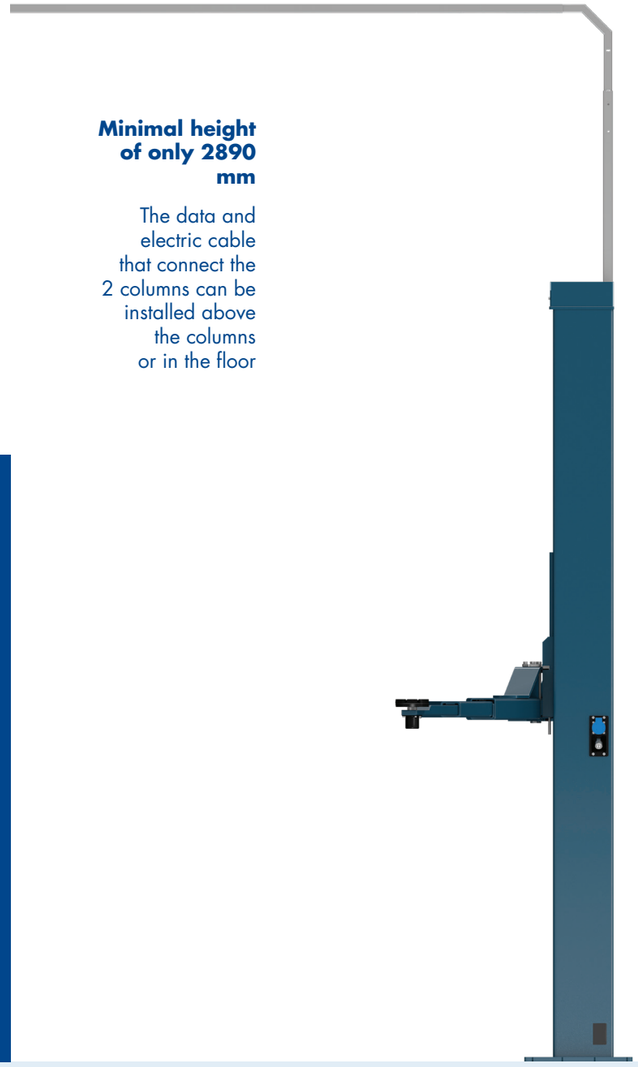

Lifting arm versions available

• For SMART LIFT 3 and 3,5 tons

DT (3 STAGE ARMS)
The short lifting arm has 3 stages, providing a large adjustable range and therefore enables to lift small and wide vehicles.

MM (MINI-MAX LIFTING ARMS) Adapter for deep drawn side skirt and off-road vehicles. Quick vertical multilevel adjustment, hand and foot operated.

• For SMART LIFT 3,5 tons only

SPORT CAR ARMS (SC) Extremely flat and sturdy arms made of solid material enable the lifting of very low and wide sports cars.

• For SMART LIFT 4 tons

UNIVERSAL CARRYING ARMS Extended 3 stage lifting arms for lifting cars and vans up to Mercedes Sprinter with long wheelbase on alternative pick up points.

SMART LIFT: THE ONE LIFT YOU NEED

Wide opening of the vehicle's front doors

3 stage lifting arm

Mini Max lifting arms : easy and convenient to lift off-road vehicles as well as low clearance vehicles

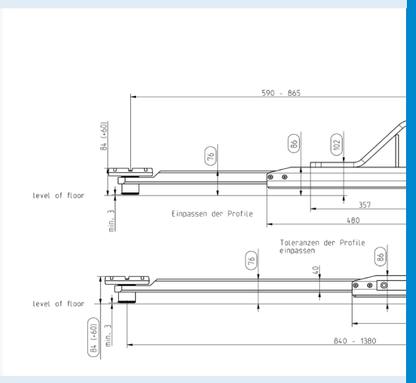

SC (Sports car arms): extremely flat construction. Very sturdy, made of solid material. Especially suitable for very low and wide sports cars.

THE SMART CHOICE

- Flexible: No ground connection between columns and adjustable height of top connection
- Suitable for a large range of vehicles
- Distance between the columns of 2460 mm
- Pick-up points starting at 75 mm*
- Short lifting arms swivelling 180°

* Version MINI-MAX

MAKE YOUR SMART CHOICE

SMART LIFT	2.30 SL	2.35 SL	2.40 SL
Lifting capacity (kg)	**3000**	**3500**	**4000**
Lifting/lowering time approx. (sec)	**40/40**	**46/40**	**46/40**
Lifting height (mm)	**2010**	**2060**	**2060**
Lowest lifting point (mm) Version DT	**95-140**	**115-190**	**-**
Version MINI-MAX	75-185	75-185	75-185
Version SC	-	80-120	-
Version UNIVERSAL	-	-	115-190
Total height column (mm)	**2890**	**2890**	**2890**
Top connection (mm)	**3720-4120**	**3685-4170**	**3685-4170**
Total width (mm) Version DT	**3100**	**3230**	**-**
Version MINI-MAX	3300	3350	3350
Version SC	-	3350	-
Version UNIVERSAL	-	-	3350
Drive-through width (mm) Version DT	**2314**	**2400**	**-**
Version MINI-MAX	2514	2520	2514
Version SC	-	2520	-
Version UNIVERSAL	-	-	2514
Column distance (mm) Version DT	**2560**	**2650**	**-**
Version MINI-MAX	2760	2770	2770
Version SC	-	2770	-
Version UNIVERSAL	-	-	2770
Arm-extraction long (mm) Version DT	**945-1495**	**940-1495**	**-**
Version MINI-MAX	1000-1480	1000-1480	1130-1840
Version SC	-	840-1380	-
Version UNIVERSAL	-	-	1130-1840
Arm-extraction short (mm) Version DT	**480-870**	**570-1160**	**-**
Version MINI-MAX	600-980	600-1000	635-1065
Version SC	-	590-865	-
Version UNIVERSAL	-	-	570-1160
Motor (kW)	**2 x 1,5**	**2 x 1,5**	**2 x 1,5**

ACCESSORIES

Height adapter 44 mm

Height adapter 155-245 mm

U-form adapter 150-233 mm

Lashing straps (2 units)

Drive-on tables (4 units)

More accessories available

Nussbaum

NUSSBAUM GROUP is a family owned business from Kehl am Rhein in Germany. For more than 40 years we produce our products exclusively in Germany. Every unit is controlled and thoroughly tested before leaving our facility. We are proud to be one of the world's leading manufacturers of automotive lifts and workshop equipment.

Made in Germany

YouTube **youtube.com/nussbaumgroup** facebook **facebook.com/nussbaumgroup**

Authorised dealer

H&G HOIST & GARAGE

0800 436 436
hoistandgarage.co.nz